SAMSUNG CONFIDENTIAL
THIS DOCUMENT CONTAINS CONFIDENTIAL
PROPRIETARY INFORMATION THAT IS
SAMSUNG ELECTRONICS CO'S PROPERTY.
DO NOT DISCLOSE TO OR DUPLICATE FOR OTHERS
EXCEPT AS AUTHORIZED BY SAMSUNG.

A51_5G mmW(SM-A516V) REV02A

sheet01 : MAIN ANT (GSM / WCDMA / LTE), 4RX
sheet02 : NR MMMB PA, LTE HB, NR ET modulator
sheet03 : TRCV, SUB ANT, LTE ET modulator
sheet04 : BT/WIFI, NFC
sheet05 : SM7250(IF, GPIO)
sheet06 : SM7250(PWR, GND)
sheet07 : PM7250, PM7150A
sheet08 : AUDIO AMP, SENSOR, SIM/T-FLASH
sheet06 : CAMERA
sheet07 : MAIN FPCB, SHIELDCAN, DISPLAY
sheet08 : 5G IFIC

SAMSUNG CONFIDENTIAL
THIS DOCUMENT CONTAINS CONFIDENTIAL
AND PROPRIETARY INFORMATION OF
SAMSUNG ELECTRONICS CO. LTD. PROPERTY.
DO NOT DISCLOSE TO OR DUPLICATE FOR OTHERS
EXCEPT AS AUTHORIZED BY SAMSUNG.

MAIN ANT RECEPTABLE

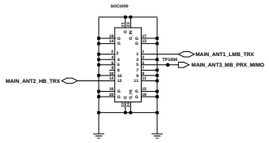

FRC Connector
(MAIN ANT1/2/3, FM RADIO to SUB PBA)

MAIN ANT1 LMB DIP
(GSM QUAD, B1/2/3/4/5/8/12/13/20/28/66, n2/5/66)

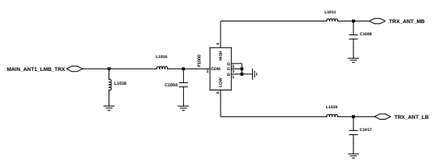

MAIN ANT1 LMB LFEMID
(GSM QUAD, B1/2/3/4/5/8/12/13/20/28/66, n2/5/66)

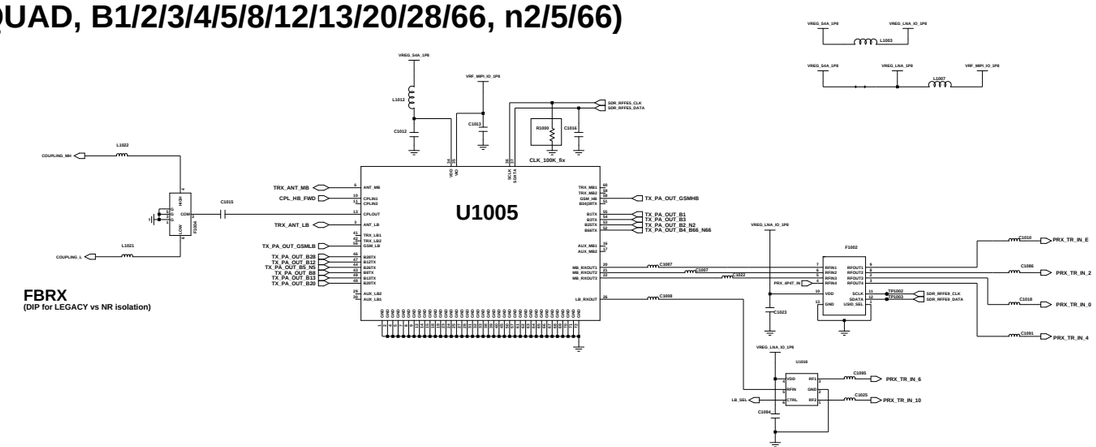

MAIN ANT1 LEGACY LMB MMMB PA
(GSM QUAD, B1/2/3/4/5/8/12/13/20/28/66)

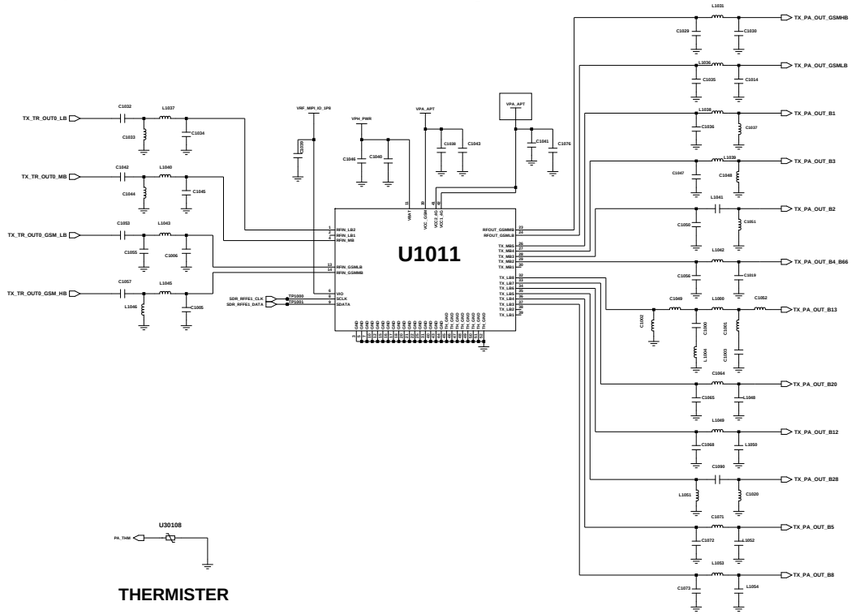

LEGACY vs NR PA OUT SW

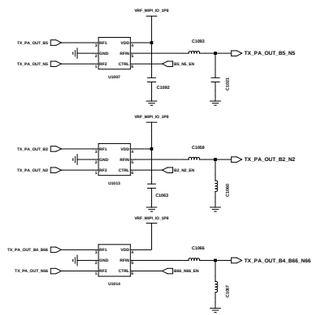

MAIN ANT3 MB_PRX_4RX (B2/4/66, n2/66)

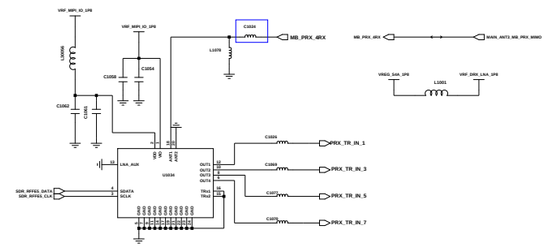

SUB ANT7 MB_DRX_4RX (B2/4/66, n2/66)

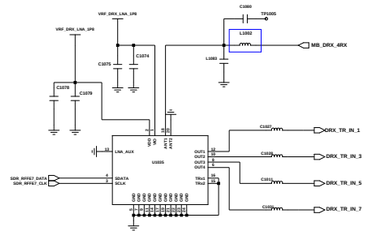

Engineer:	
Drawn by:	
R&D CHK:	
DOC CTRL CHK:	
MFG SOURCE CHK:	
QA CHK:	

TITLE: SM-A516V

Size:

REV:

Drawing Number:

Page : 1/13

Changed by:	Date Changed:	Time Changed:

SAMSUNG CONFIDENTIAL
THIS DOCUMENT CONTAINS CONFIDENTIAL
AND PROPRIETARY INFORMATION OF
SAMSUNG ELECTRONICS CO. LTD. PROPERTY.
DO NOT DISCLOSE TO OR DUPLICATE FOR OTHERS
EXCEPT AS AUTHORIZED BY SAMSUNG.

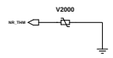

NR THERMISTER

MAIN ANT1/2
LEGACY HB & NR MMMB PA
(B7, n2/5/66)

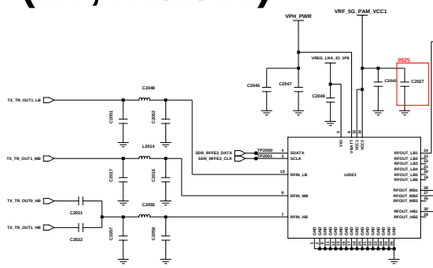

n2/n5/n66/n41 PA

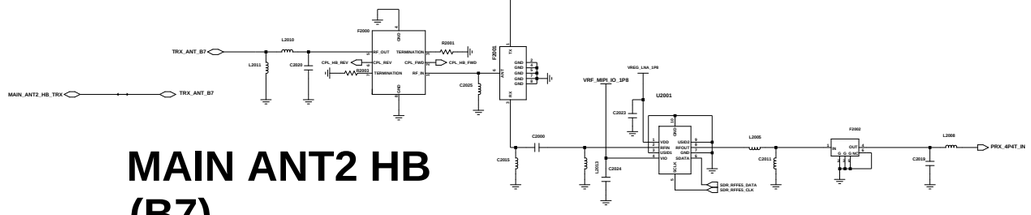

MAIN ANT2 HB
(B7)

LEGACY HB & NR ET Modulator

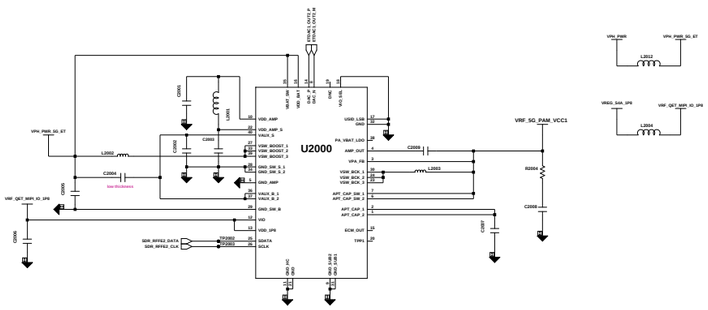

Engineer:	
Drawn by:	
ISSUE DATE:	
DOC. CTRL CHR:	
MFG ISSUE CHR:	
TITLE:	SM-A516V
Size:	
REV:	
Drawing Number:	
Page : 2/11	

Changed by: | Date Changed: | Time Changed: | QA CHR:

SAMSUNG CONFIDENTIAL
THIS DOCUMENT CONTAINS CONFIDENTIAL
AND PROPRIETARY INFORMATION OF
SAMSUNG ELECTRONICS CO. LTD. PROPERTY.
DO NOT DISCLOSE TO OR DUPLICATE FOR OTHERS
EXCEPT AS AUTHORIZED BY SAMSUNG.

TRANSCEIVER(SDR865)

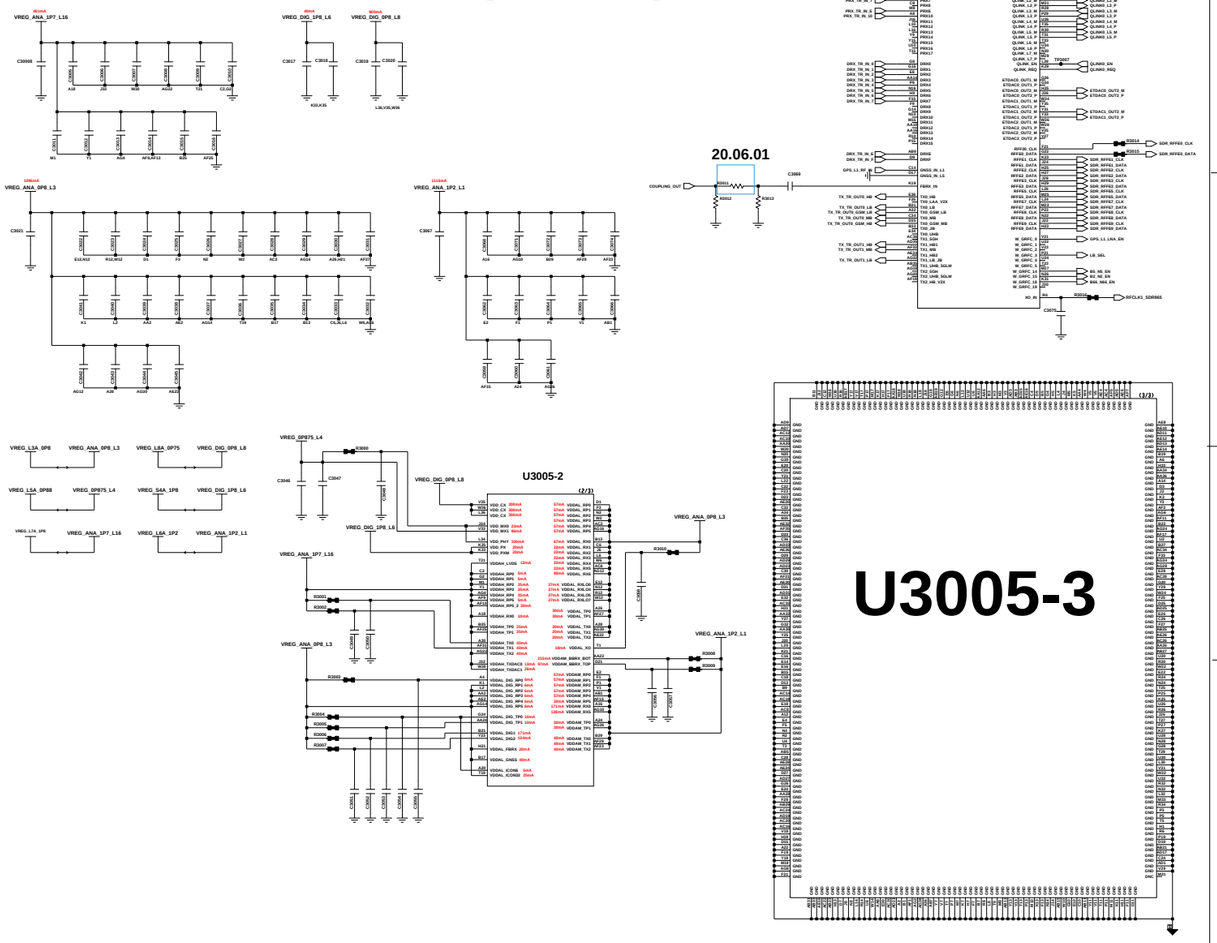

SUB ANT1
(LB / GL5)

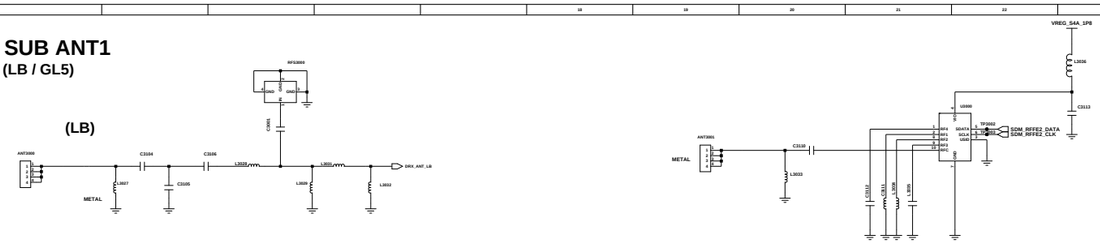

SUB ANT2
(M/HB, GL1, WIFI0_2G)

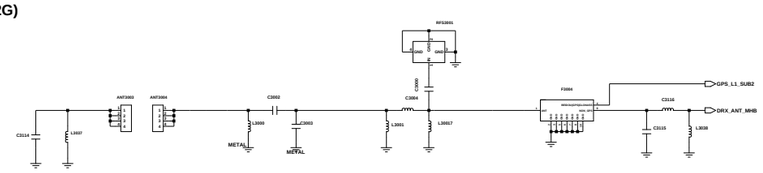

SUB ANT5

LDS

SUB ANT6
(NA)

SUB ANT7
(MB_DRX_MIMO)

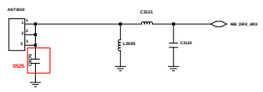

LTE ET Modulator

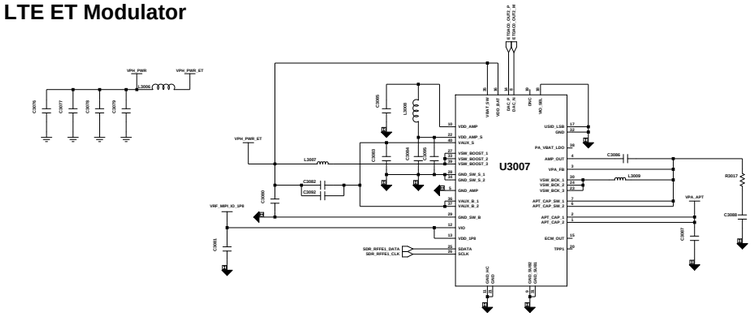

SUB ANT1
DRX_LB
(B5/8/12/13/20/28_G850/900)

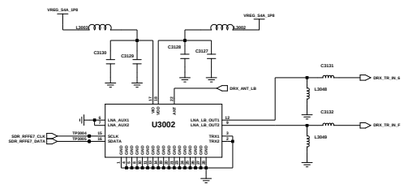

SUB ANT2
DRX_MHB
(B1/2/3/4/7/66_DCS/PCS)

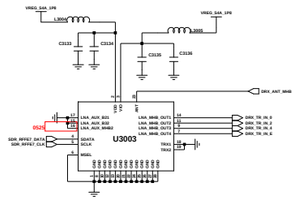

GPS L1

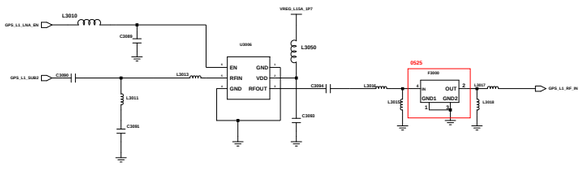

GPS L5

COUPLING SW

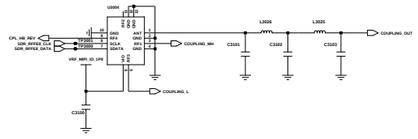

CCP

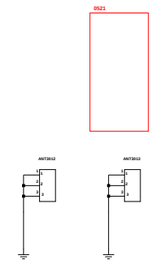

Engineer:	
Drawn by:	
R&D Chk:	
DOC CTRL Chk:	
MFG ENGR Chk:	
QA Chk:	

TITLE: SM-A516V

Size:

Changed by: | Date Changed: | Time Changed: | REV: | Drawing Number: | Page : (61)

SAMSUNG CONFIDENTIAL
THIS DOCUMENT CONTAINS CONFIDENTIAL
PROPRIETARY INFORMATION THAT IS
SAMSUNG ELECTRONICS CO'S PROPERTY.
DO NOT DISCLOSE TO OR DUPLICATE FOR OTHERS
EXCEPT AS AUTHORIZED BY SAMSUNG.

WIFI/BT/FM

SUB3 ANT

WIFI ANT

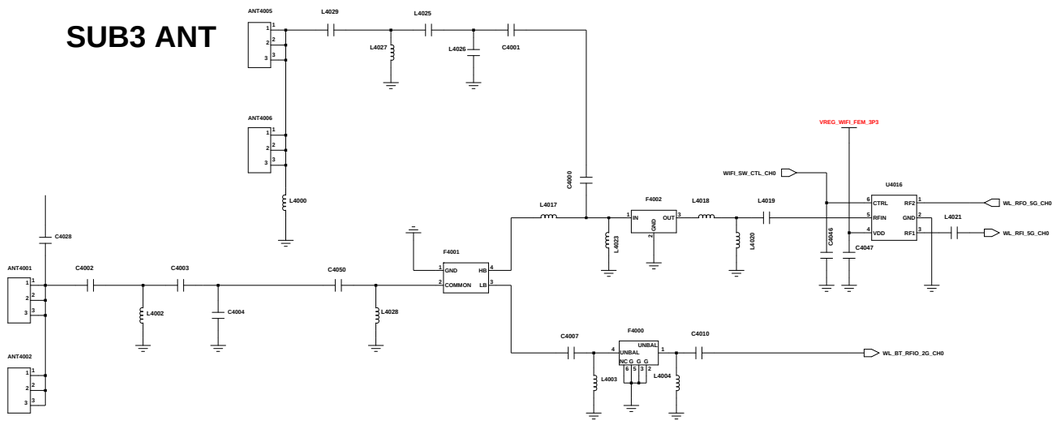

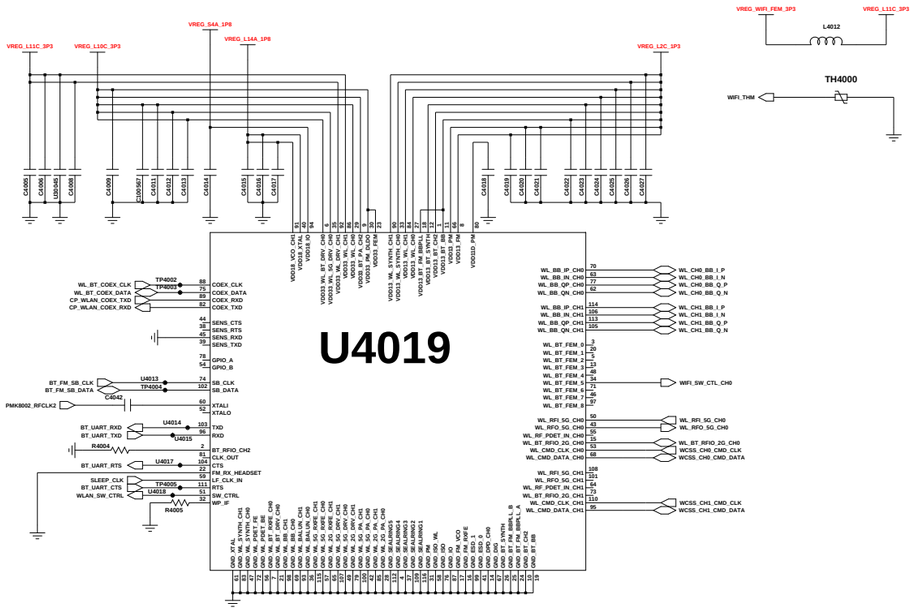

NFC

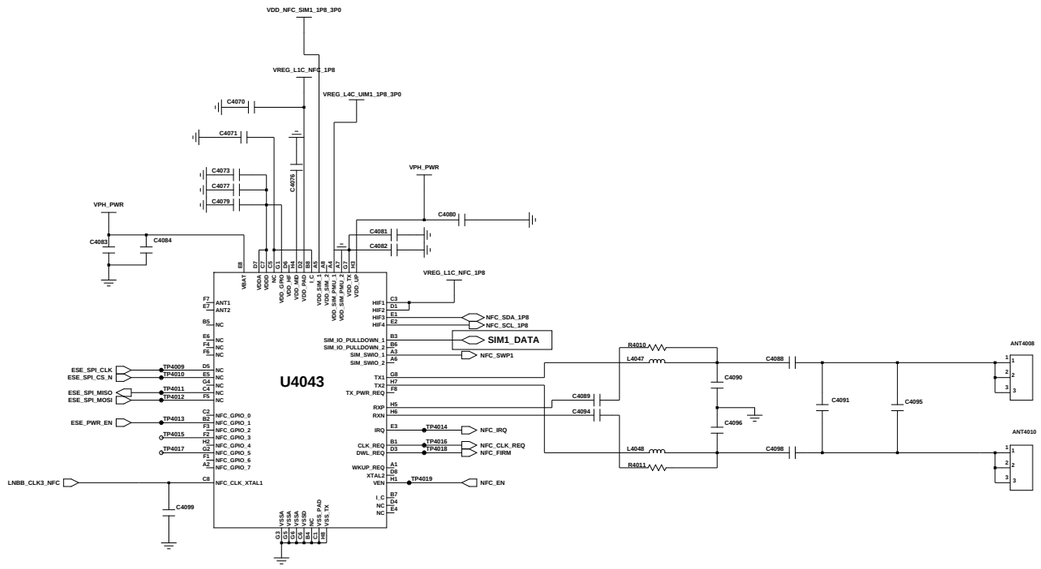

eSE : PN80T
UICC : PN553

Engineer:					
Drawn by:					
R&D CHK:			TITLE: SM-A516V		Size:
DOC CTRL CHK:					
MFG ENGR CHK:					
Changed by: user118	Date Changed:	Time Changed:	QA CHK:	REV:	Drawing Number:

SAMSUNG CONFIDENTIAL
THIS DOCUMENT CONTAINS CONFIDENTIAL
PROPRIETARY INFORMATION THAT IS
SAMSUNG ELECTRONICS CO'S PROPERTY.
DO NOT DISCLOSE TO OR DUPLICATE FOR OTHERS
EXCEPT AS AUTHORIZED BY SAMSUNG.

SM7250
(INTERFACE, GPIO)

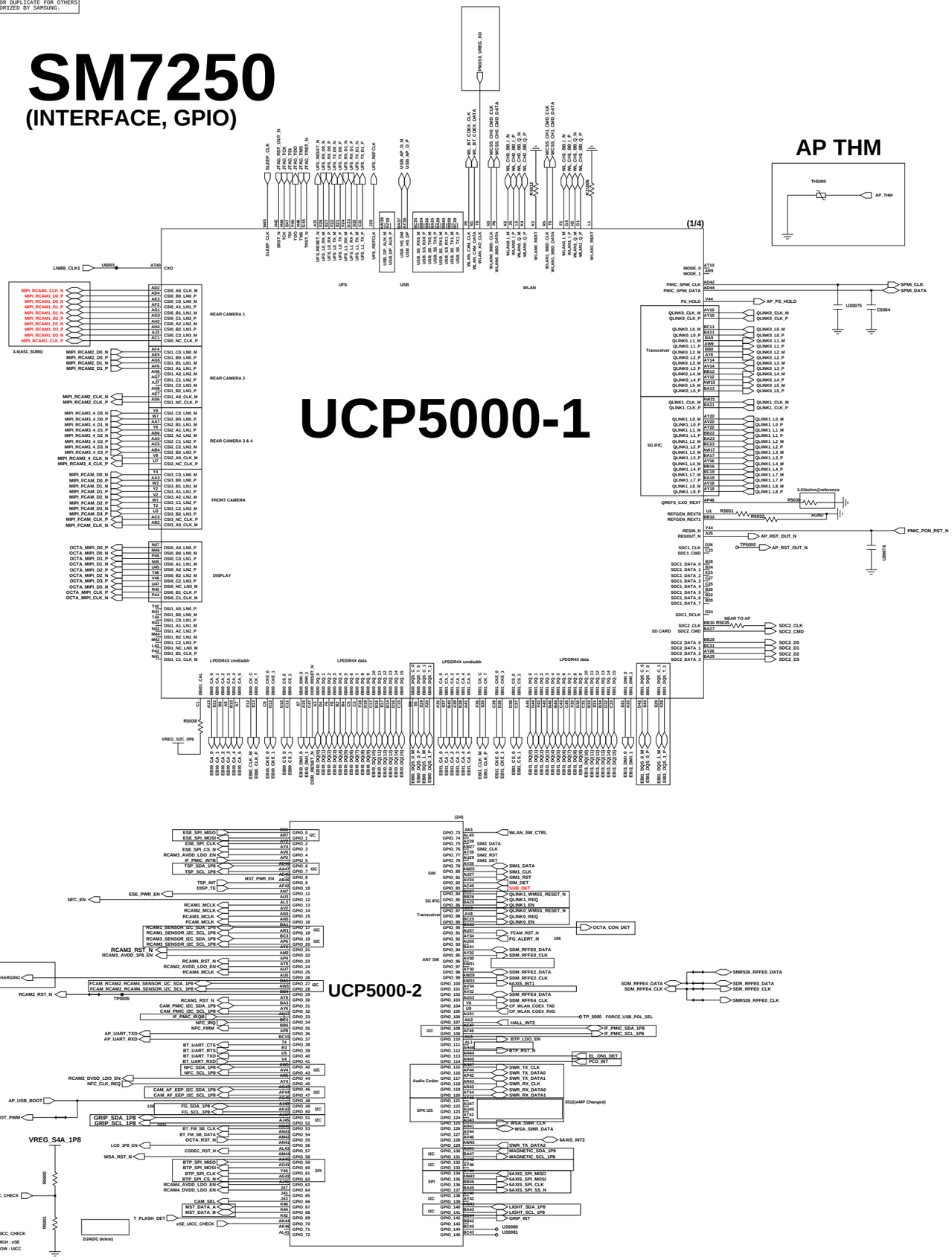

I2C PULL UP

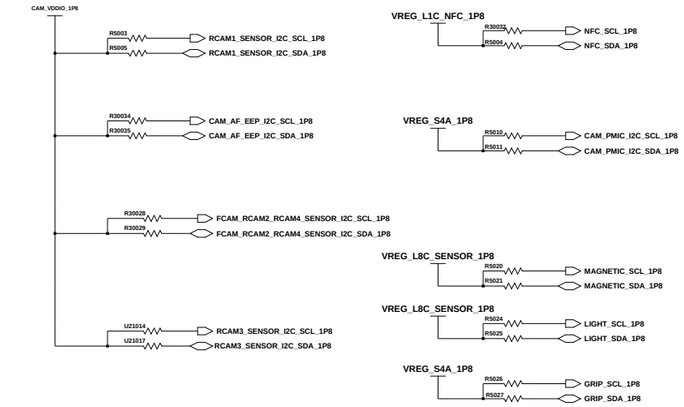

IF PMIC PULL UP

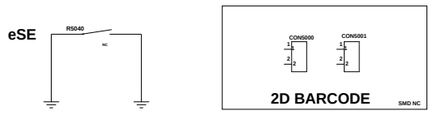

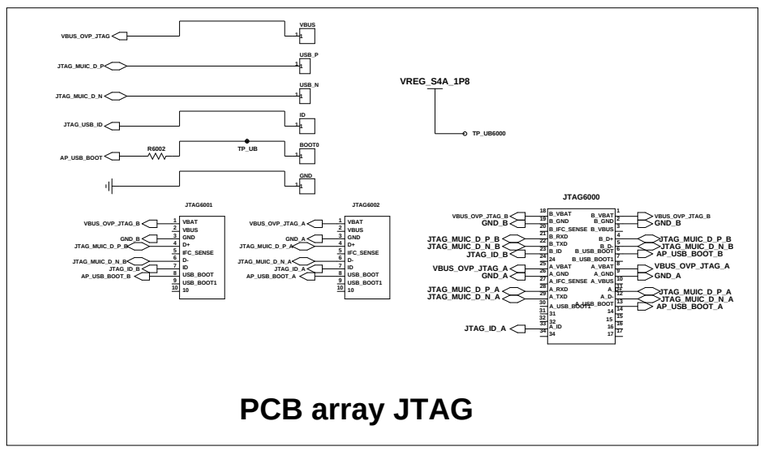

PCB array JTAG

Engineer			
Drawn by:			
R&D CHK:	TITLE:		Size:
DOC CTRL CHK:	SM-A516V		
MFG ENGR CHK:			
QA CHK:	REV :	Drawing Number	Page : 5/11

Changed by:	Date Changed:	Time Changed:

SAMSUNG CONFIDENTIAL
THIS DOCUMENT CONTAINS CONFIDENTIAL PROPRIETARY INFORMATION THAT IS SAMSUNG ELECTRONICS CO'S PROPERTY. DO NOT DISCLOSE TO OR DUPLICATE FOR OTHERS EXCEPT AS AUTHORIZED BY SAMSUNG.

SM7250
(POWER, GND)

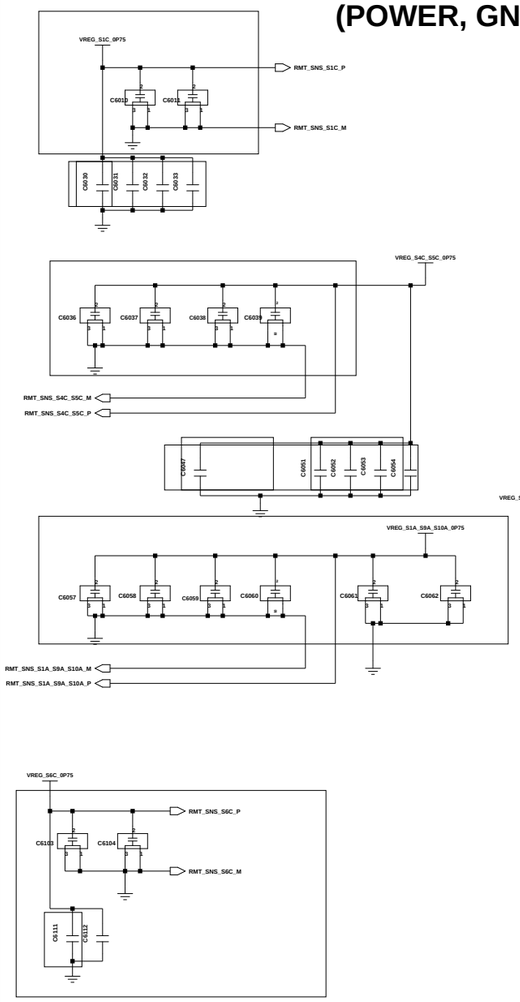

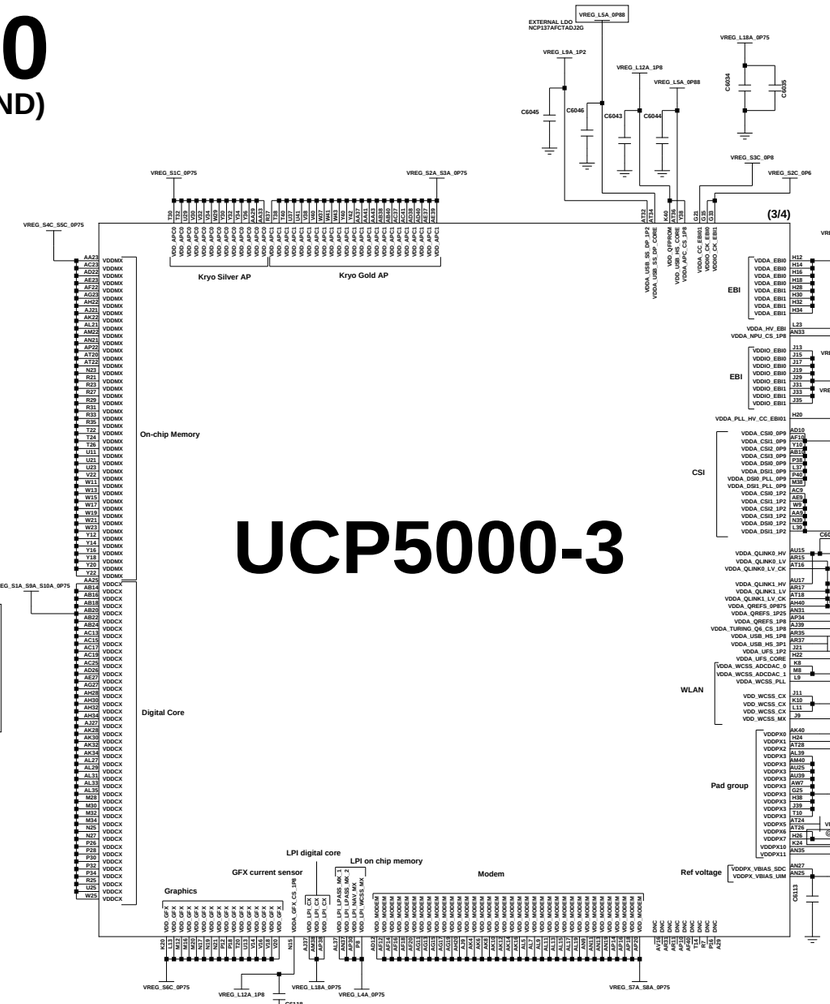

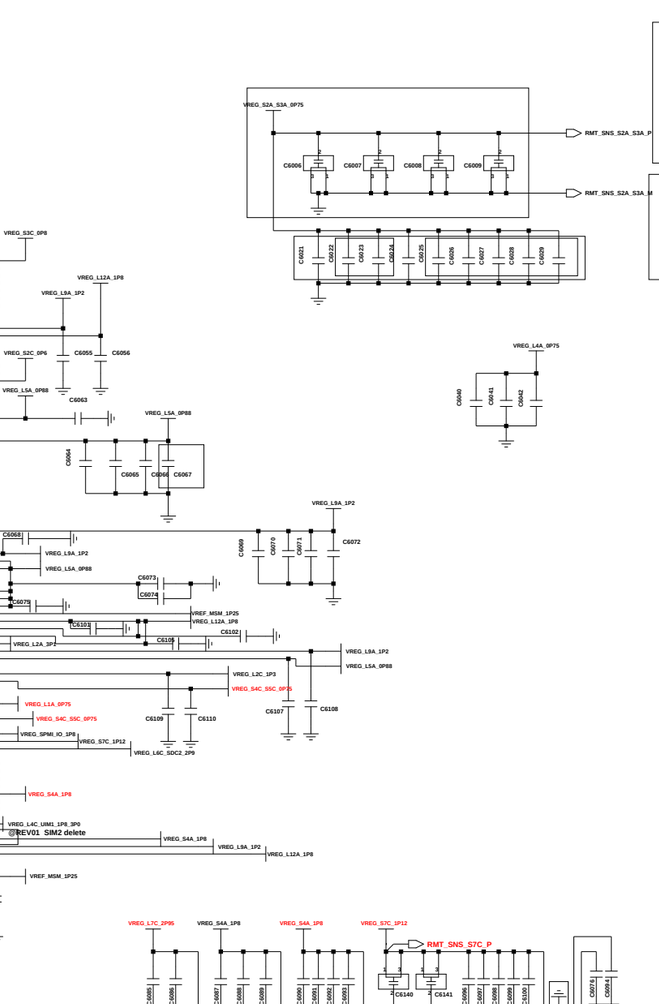

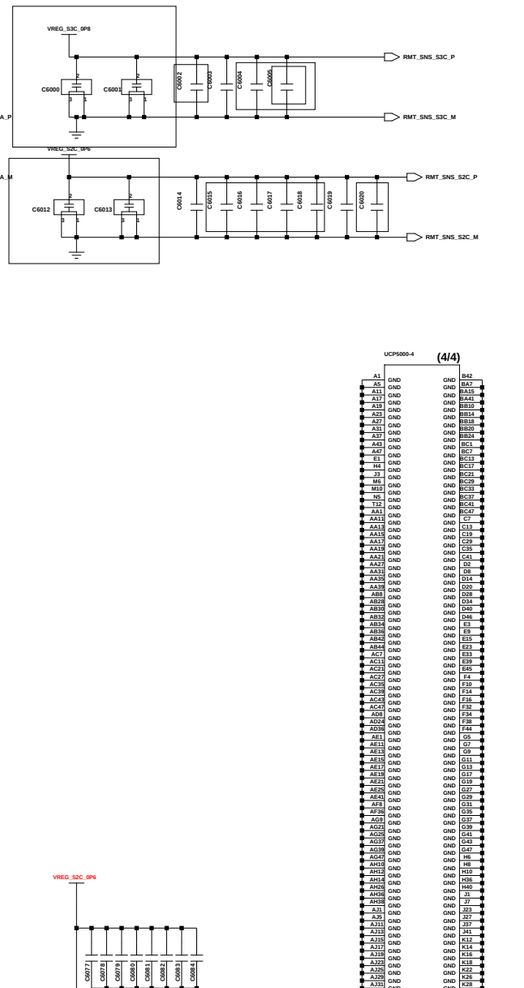

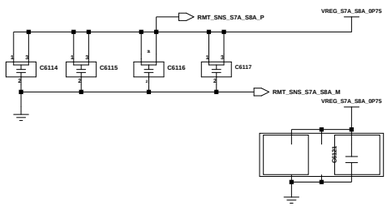

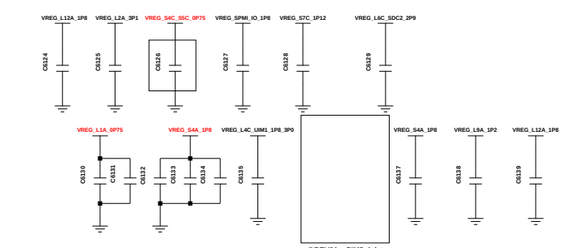

CAUTION: PLACEMENT
Near to TP AP_USB_BOOT

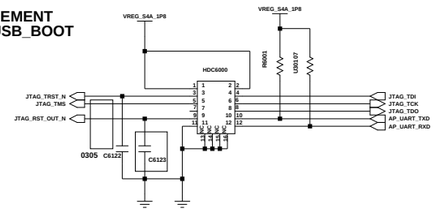

JTAG CONNECTOR
(3711-001713 / AXE612124)

PCB array JTAG

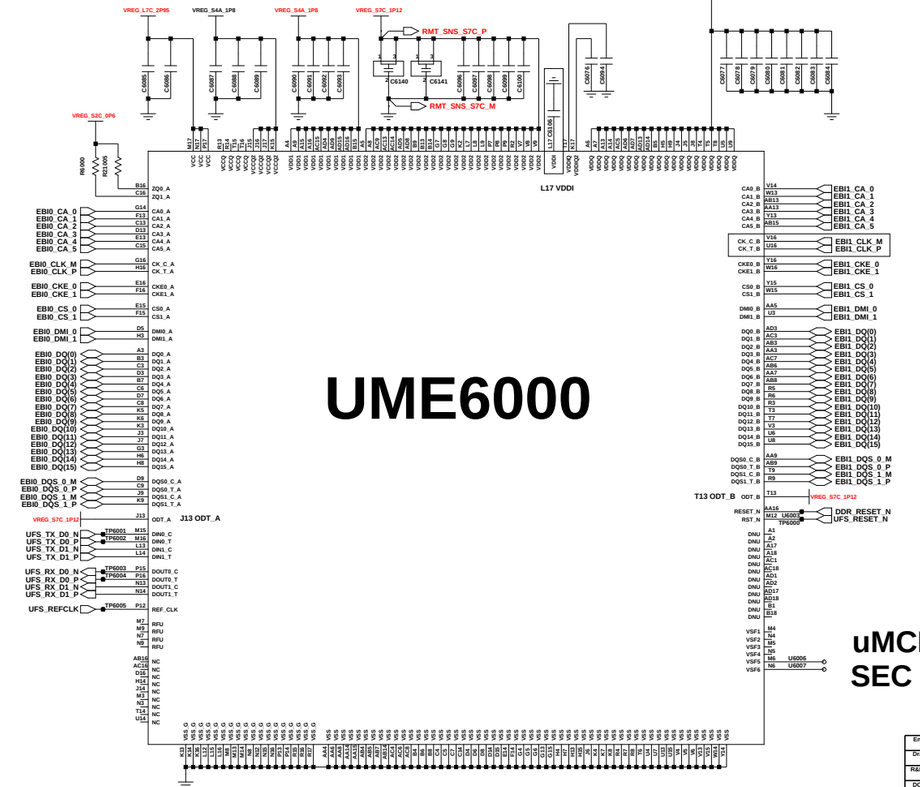

uMCP(6GB+128GB)
SEC : 1108-000677

Engineer:	
Drawn by:	
R&D CHK:	TITLE: SM-A516V
DOC CTRL CHK:	
MFG ENGR CHK:	
Changed by: / Date Changed: / Time Changed:	QA CHK: / REV: / Drawing Number: / Size: / Page : 6/11

SAMSUNG CONFIDENTIAL
THIS DOCUMENT CONTAINS CONFIDENTIAL
AND PROPRIETARY INFORMATION OF
SAMSUNG ELECTRONICS CO'S PROPERTY.
DO NOT DISCLOSE TO OR DUPLICATE FOR OTHERS
EXCEPT AS AUTHORIZED BY SAMSUNG.

POWER (PM7250,PM7150A)

H/W ID table

HW ID	BOARD REVISION	Value	Mech
00	A516V_REV00	6.04K	
01	A516V_REV01	9.1K	
02	A516V_REV02/02A	12.4K	
03		18K	
04		22K	
05		30K	
06		39K	
07		47K	
08		56K	
09		68K	
10		82K	
11		100K	
12		120K	
13		150K	
14		180K	
15		200K	
16		240K	
17		280K	
18		330K	
19		430K	
20		560K	
21		750K	
22		1000K	
23		1500K	
24		3000K	

H/W ID

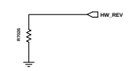

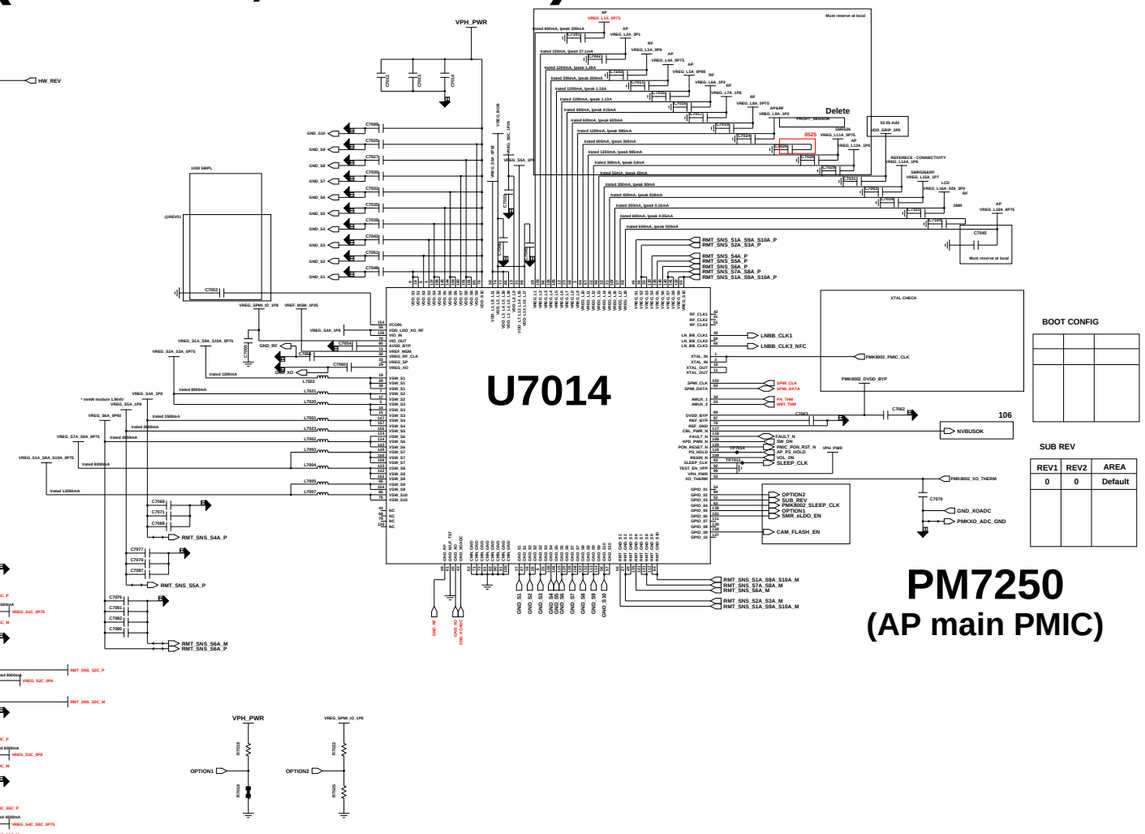

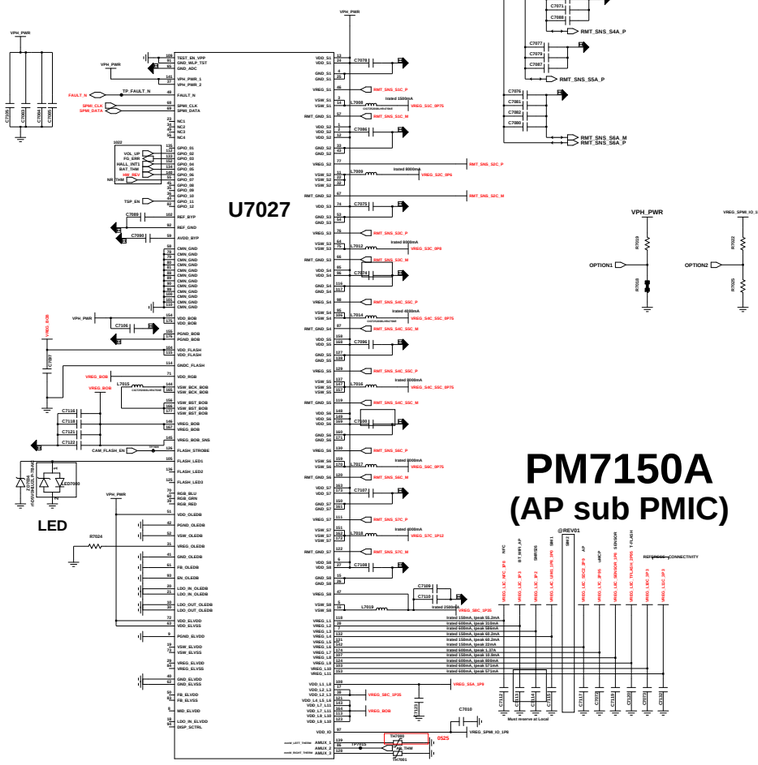

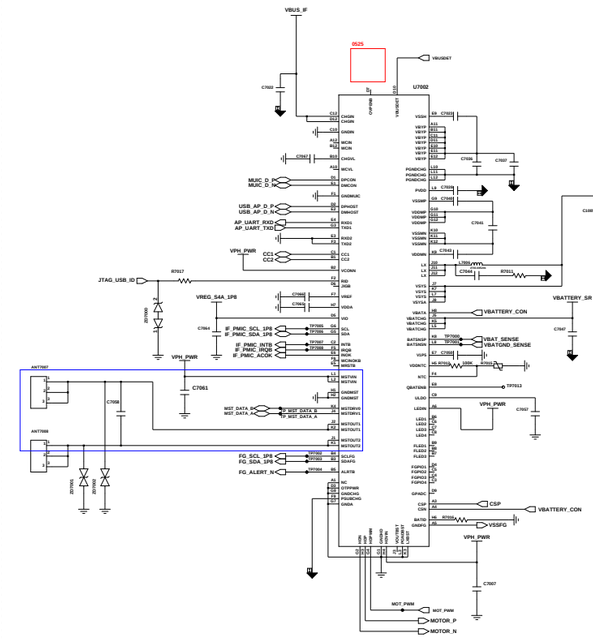

IF PMIC (MU106)

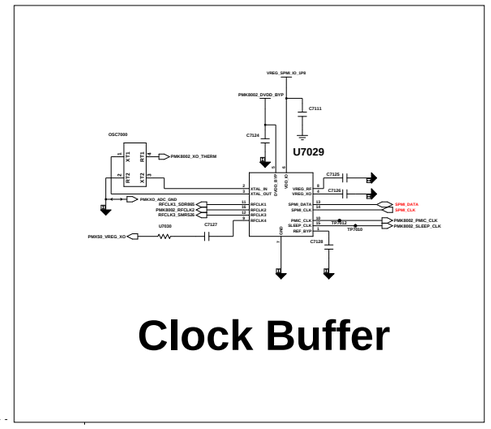

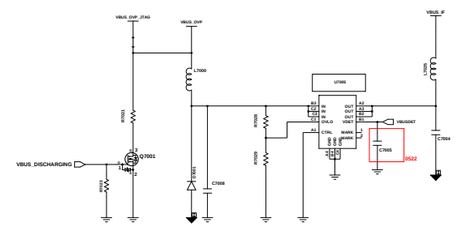

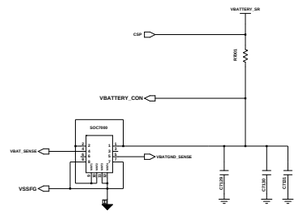

CAMERA DECO delete

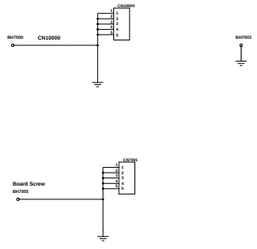

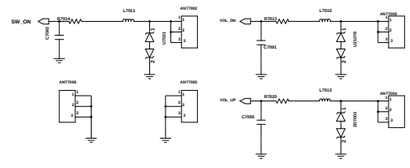

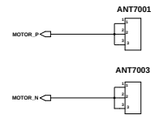

Charger Thermistor

SM-A516V

SAMSUNG CONFIDENTIAL
THIS DOCUMENT CONTAINS CONFIDENTIAL PROPRIETARY INFORMATION THAT IS SAMSUNG ELECTRONICS CO'S PROPERTY. DO NOT DISCLOSE TO OR DUPLICATE FOR OTHERS EXCEPT AS AUTHORIZED BY SAMSUNG.

AUDIO & SENSOR PART

CHANGE TO WCD9380/9385

Audio Codec

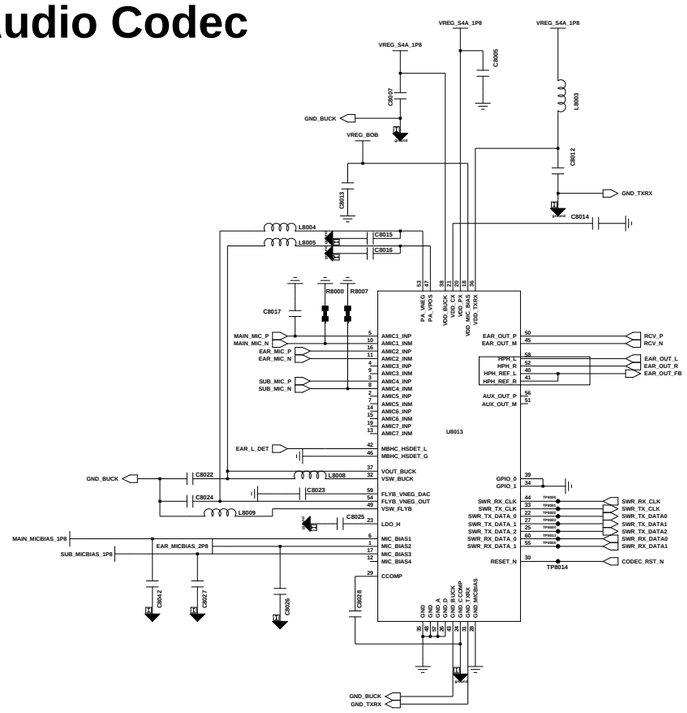

SPK AMP

CHANGE TO WSA8815

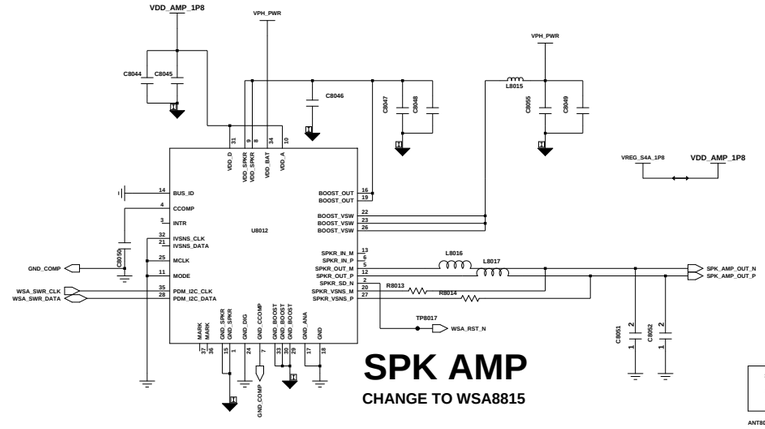

2nd MIC

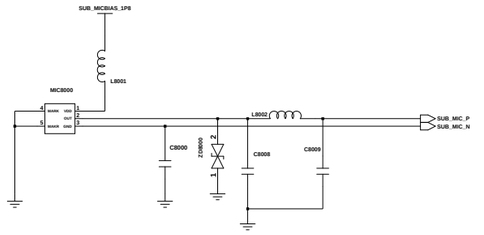

RCV CONTACT

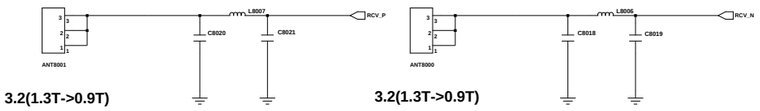

EAR MIC

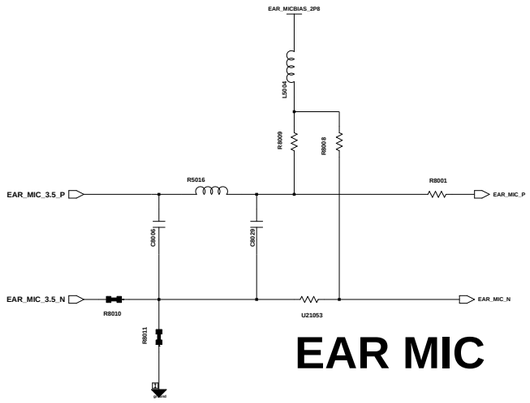

SENSOR

DUAL SIM / T-FLASH (3in2)

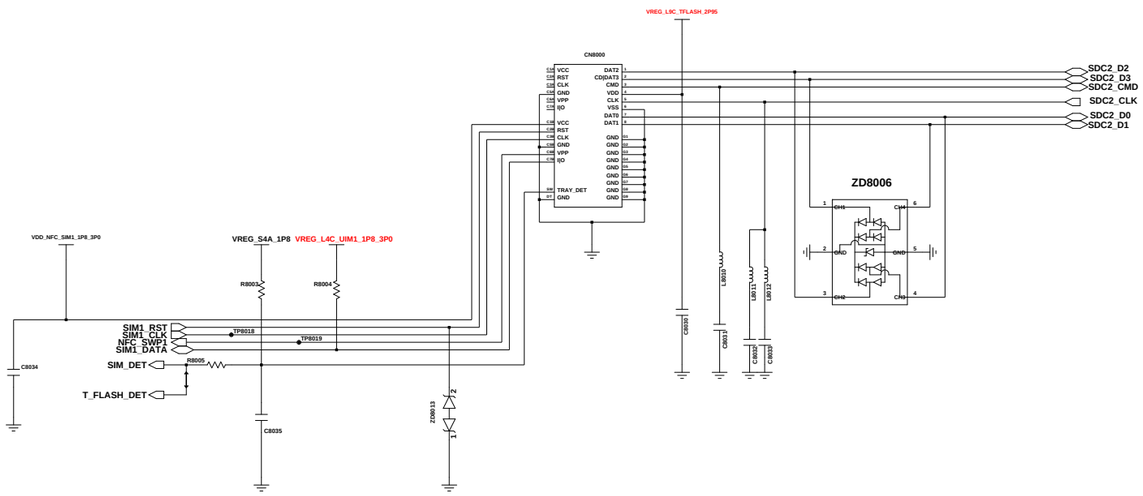

RGB Sensor A51 SUB6

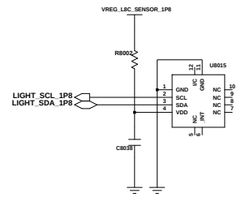

HALL_IC

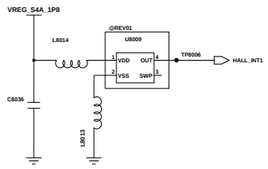

ACC&GYRO SENSOR

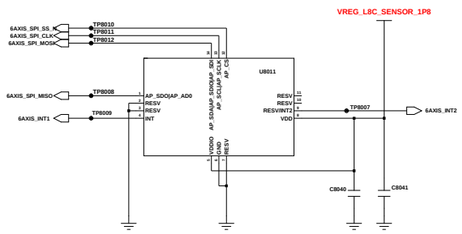

Dummy CAP

MAGNETIC SENSOR

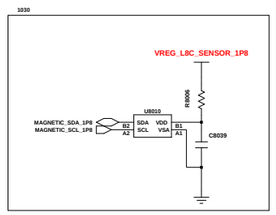

Engineer:	
Drawn by:	
R&D CHK:	TITLE: SM-A516V
DOC CTRL CHK:	
MFG ENGR CHK:	

Size:

Changed by:	Date Changed:	Time Changed:	QA CHK:	REV:	Drawing Number:	Page : 8/11

SAMSUNG CONFIDENTIAL
THIS DOCUMENT CONTAINS CONFIDENTIAL PROPRIETARY INFORMATION THAT IS SAMSUNG ELECTRONICS CO'S PROPERTY. DO NOT DISCLOSE TO OR DUPLICATE FOR OTHERS EXCEPT AS AUTHORIZED BY SAMSUNG.

CAMERA

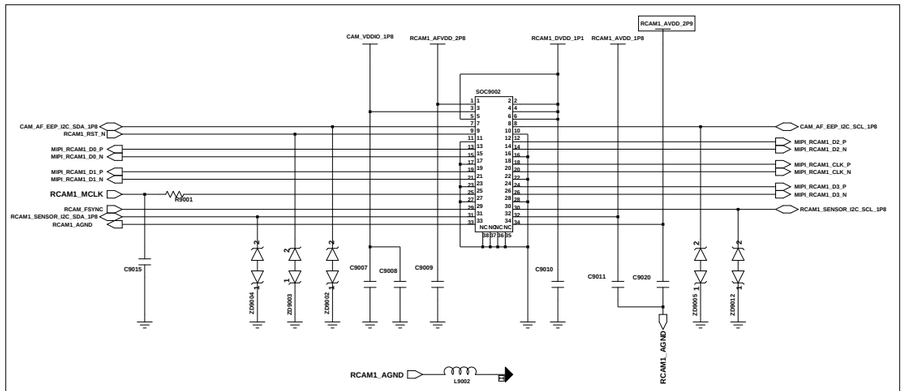

RCAM1_48M CAMERA(34PIN)(A51_SUB6)

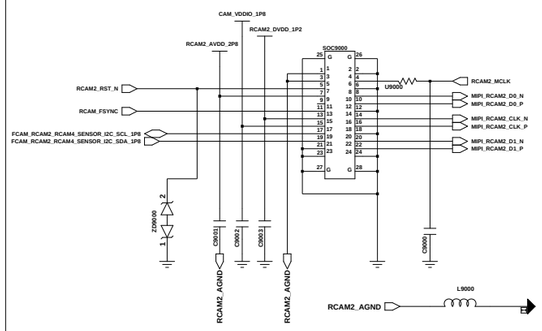

RCAM2_5M CAMERA(24PIN)

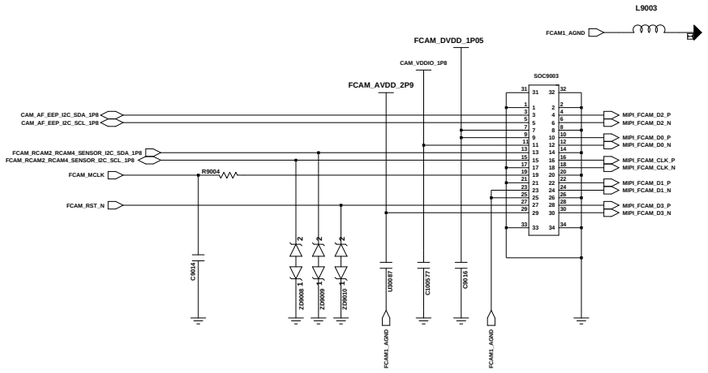

FRONT_32M CAMERA (30PIN)

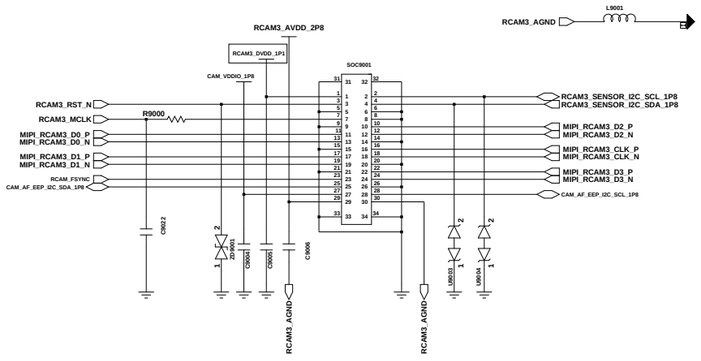

RCAM3_SUPER WIDE_12M CAMERA(30pin)_Hi1336

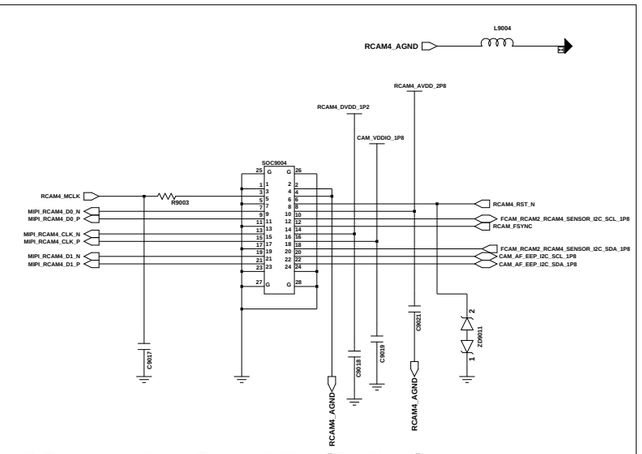

RCAM4_5M CAMERA(24PIN)(A51_SUB6)

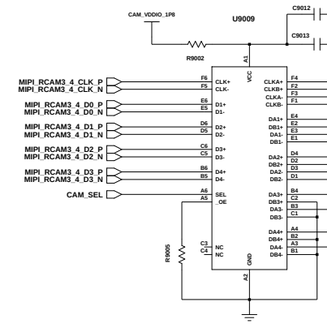

MIPI SWITCH (RCAM3,RCAM4)

MIPI SWITCH changed(0813)

CAM PMIC

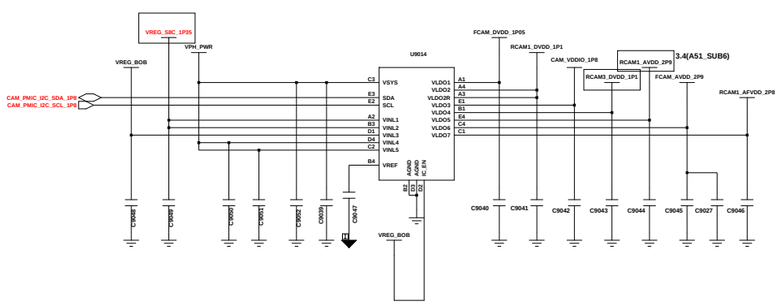

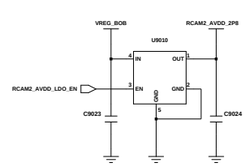

RCAM2_AVDD

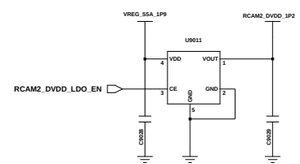

RCAM2_DVDD

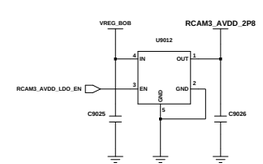

RCAM3_AVDD

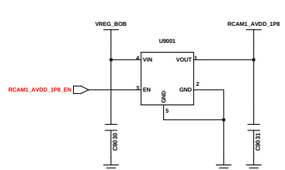

RCAM1_AVDD

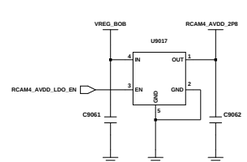

RCAM4_AVDD

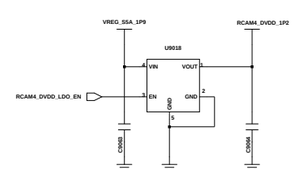

RCAM4_DVDD

Engineer:	CAMERA, DISPLAY, MHL		
Drawn by:			
R&D CHK:	TITLE:	Size:	
DOC CTRL CHK:	SM-A516V		
MFG ENGR CHK:			
Changed by: / Date Changed: / Time Changed: / QA CHK:	REV:	Drawing Number:	Page : 9/11

SAMSUNG CONFIDENTIAL
THIS DOCUMENT CONTAINS CONFIDENTIAL PROPRIETARY INFORMATION THAT IS SAMSUNG ELECTRONICS CO'S PROPERTY. DO NOT DISCLOSE TO OR DUPLICATE FOR OTHERS EXCEPT AS AUTHORIZED BY SAMSUNG.

MAIN FPCB(A51_SUB6)

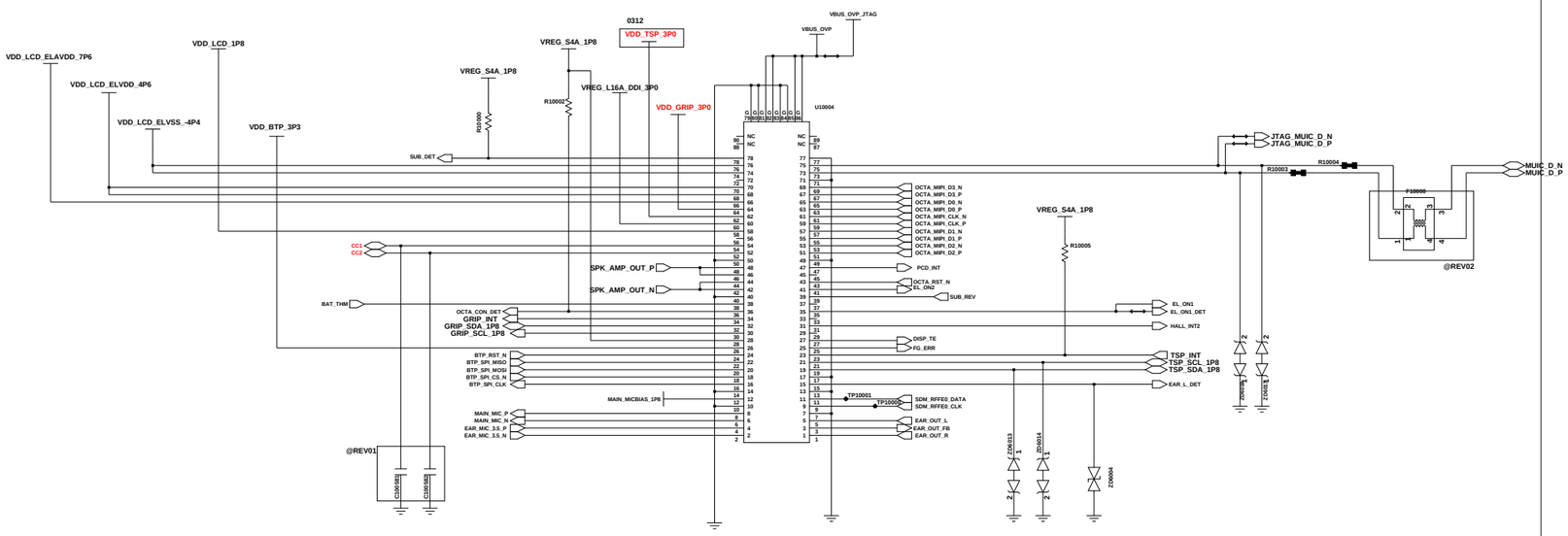

GRIP LDO

03.05 delete

FOD LDO G7

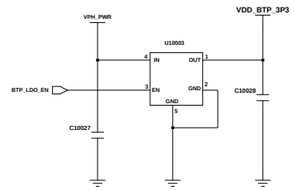

DISPLAY

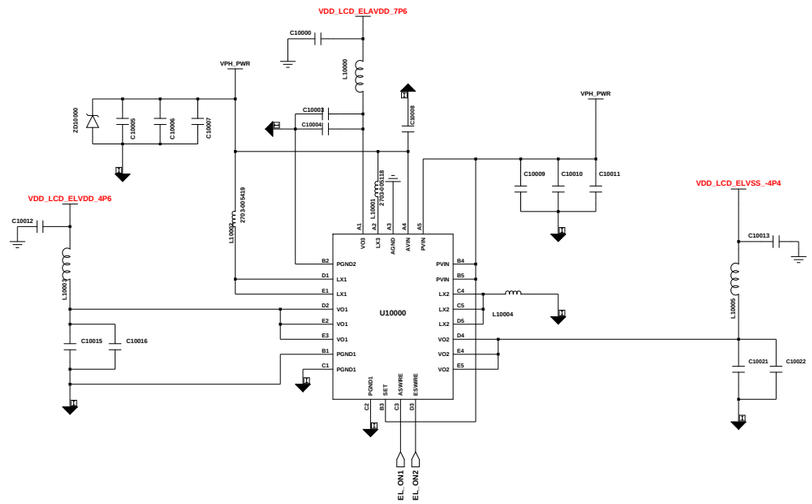

DISPLAY PMIC A51 SUB6

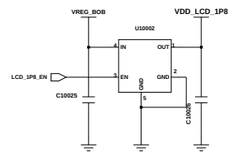

VDD_LCD_1P8

VDD_UB_DDR_1P5 delete(OCTA)
A51_SUB6

VDD_TSP_1P8 delete(OCTA)

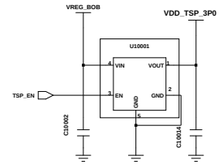

VDD_TSP_3P0

SHIELDCAN

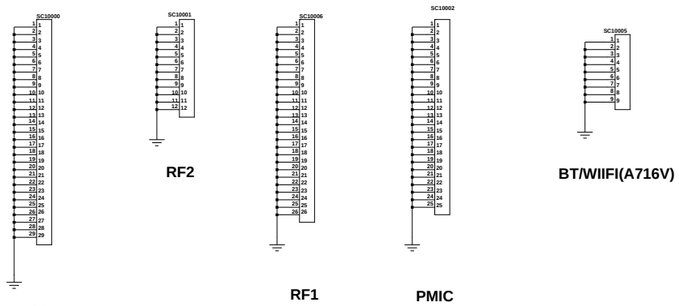

AP
RF2
RF1
PMIC
BT/WIIFI(A716V)

Engineer:	SAMSUNG ELECTRONICS
Drawn by:	
R&D CHK:	TITLE: SM-A516V
DOC CTRL CHK:	Size:
MFG ENGR CHK:	
QA CHK:	REV: Drawing Number: Page : 10/11

Changed by: user20 | Date Changed: Thursday, June 18, 2015 | Time Changed: 10:18:28 am

SAMSUNG CONFIDENTIAL
THIS DOCUMENT CONTAINS CONFIDENTIAL
PROPRIETARY INFORMATION THAT IS
SAMSUNG ELECTRONICS CO'S PROPERTY.
DO NOT DISCLOSE TO OR DUPLICATE FOR OTHERS
EXCEPT AS AUTHORIZED BY SAMSUNG.

5G IFIC

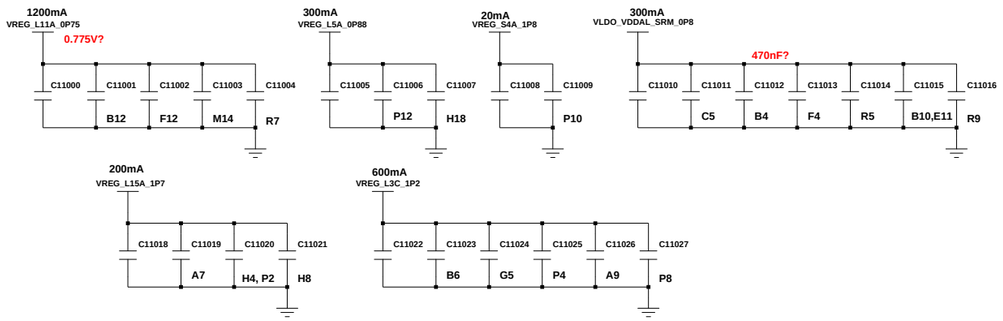

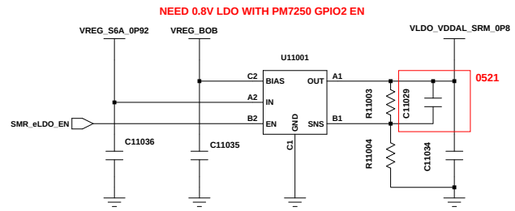

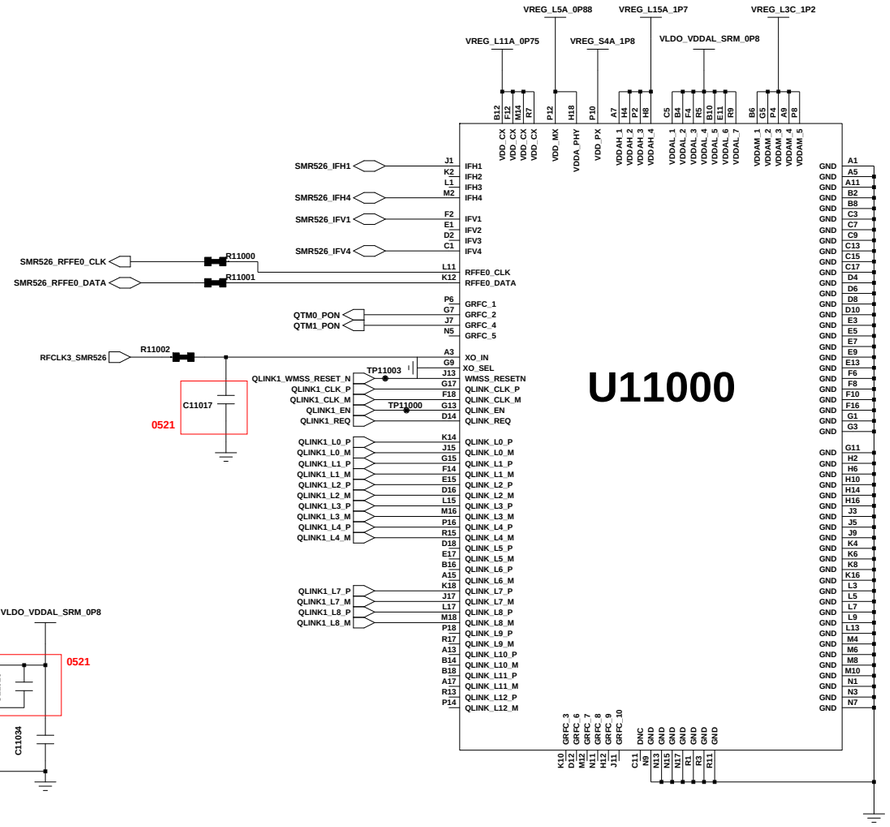

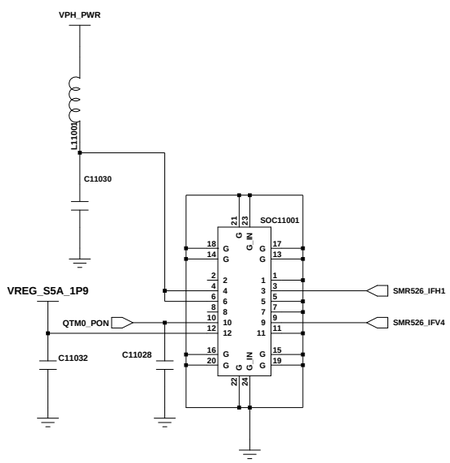

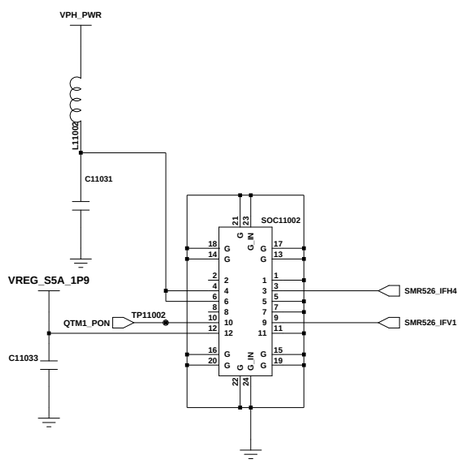

mmW_ANT_CONN (Left)

mmW_ANT_CONN (Right)

Engineer: SEC	SAMSUNG ELECTRONICS		
Drawn by: SEC			
R&D CHK:	TITLE: SM-A516V	Size: 12 1 8 A	
DOC CTRL CHK:			
MFG ENGR CHK:			
Changed by: user	Date Changed: Tuesday, April 2, 2019	Time Changed: 4:11:40 pm	QA CHK:
REV:	Drawing Number:	Page : 11/11	

CN8000
UME6000
UCP5000
SC10000
SC10001
U1011
U3007
L3007
L3009
U8015
CN10000
CON5001
SOC9000
SOC9002
CN7001
U8013
U9009
U7002
L7006
L8015
U8012
U11000
U4043
SOC9001
VBUS
ADPIN
ID
GND

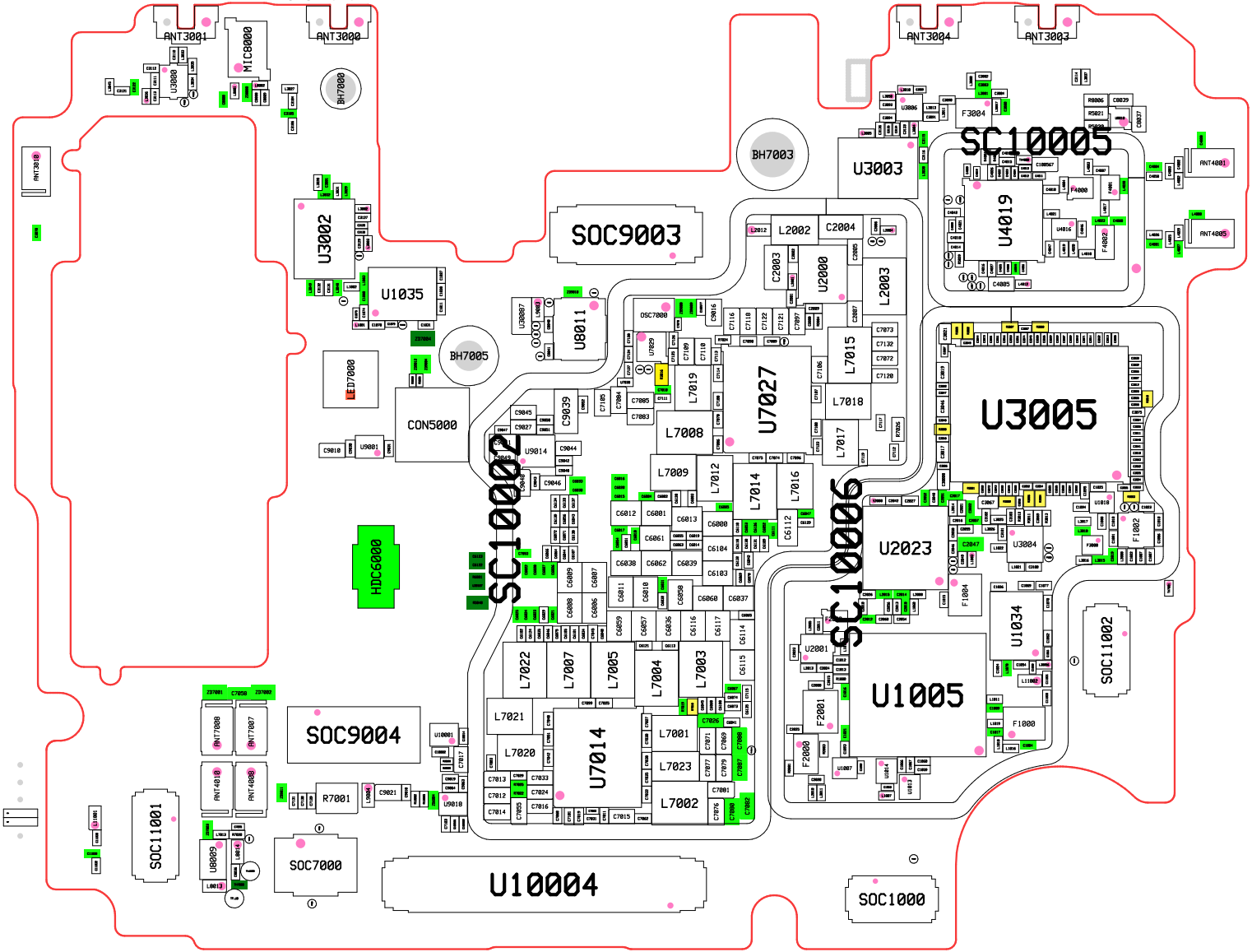
ANT3001
MIC8000
ANT3000
U3000
BH7000
ANT3018
U3002
U1035
BH7005
U7000
CON5000
HDC6000
SOC9003
U8011
BH7003
U3003
ANT3004
ANT3003
SC10005
U4019
ANT4001
ANT4005
U3005
U7027
SC10002
SC10006
U2023
U1005
U1034
SOC11002
SOC9004
ANT7008
ANT7007
ANT4018
ANT4008
R7001
SOC11001
SOC7000
U10004
SOC1000